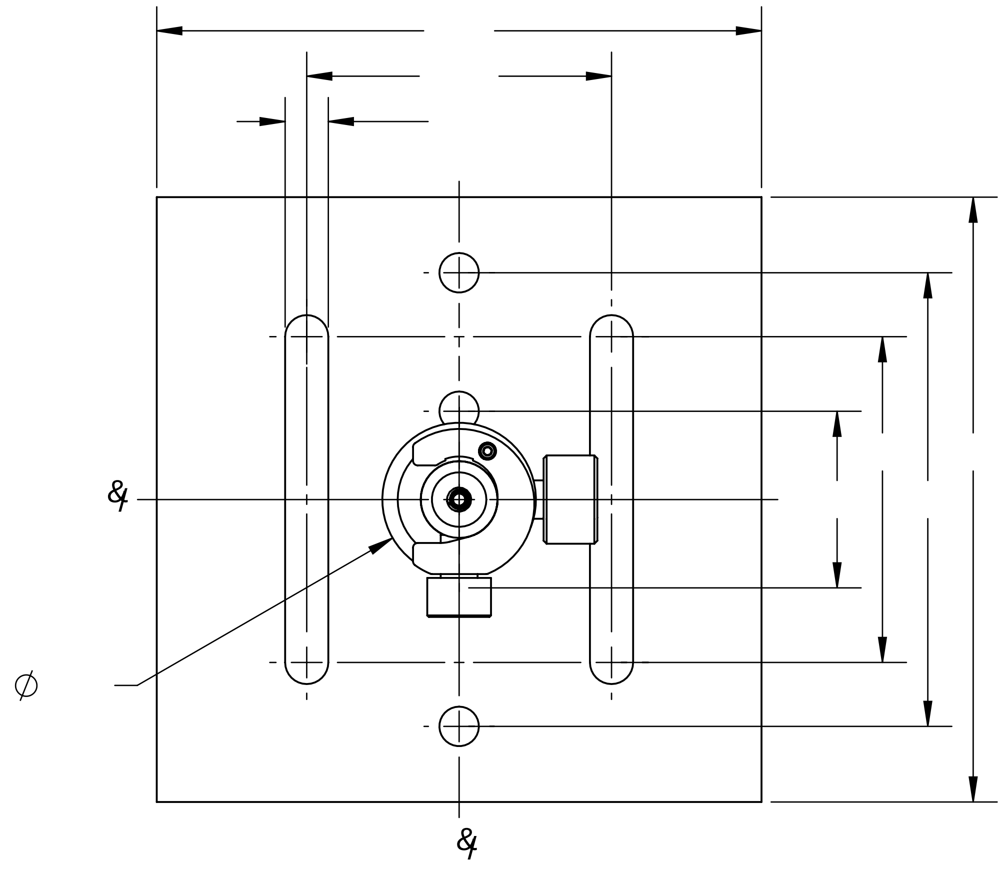

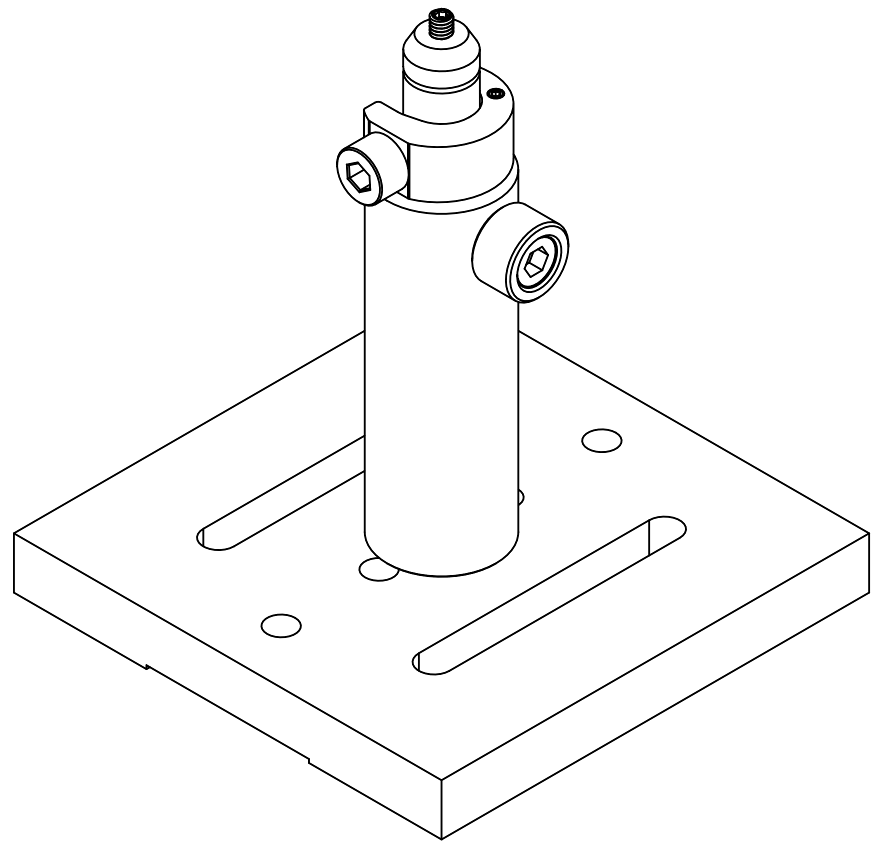

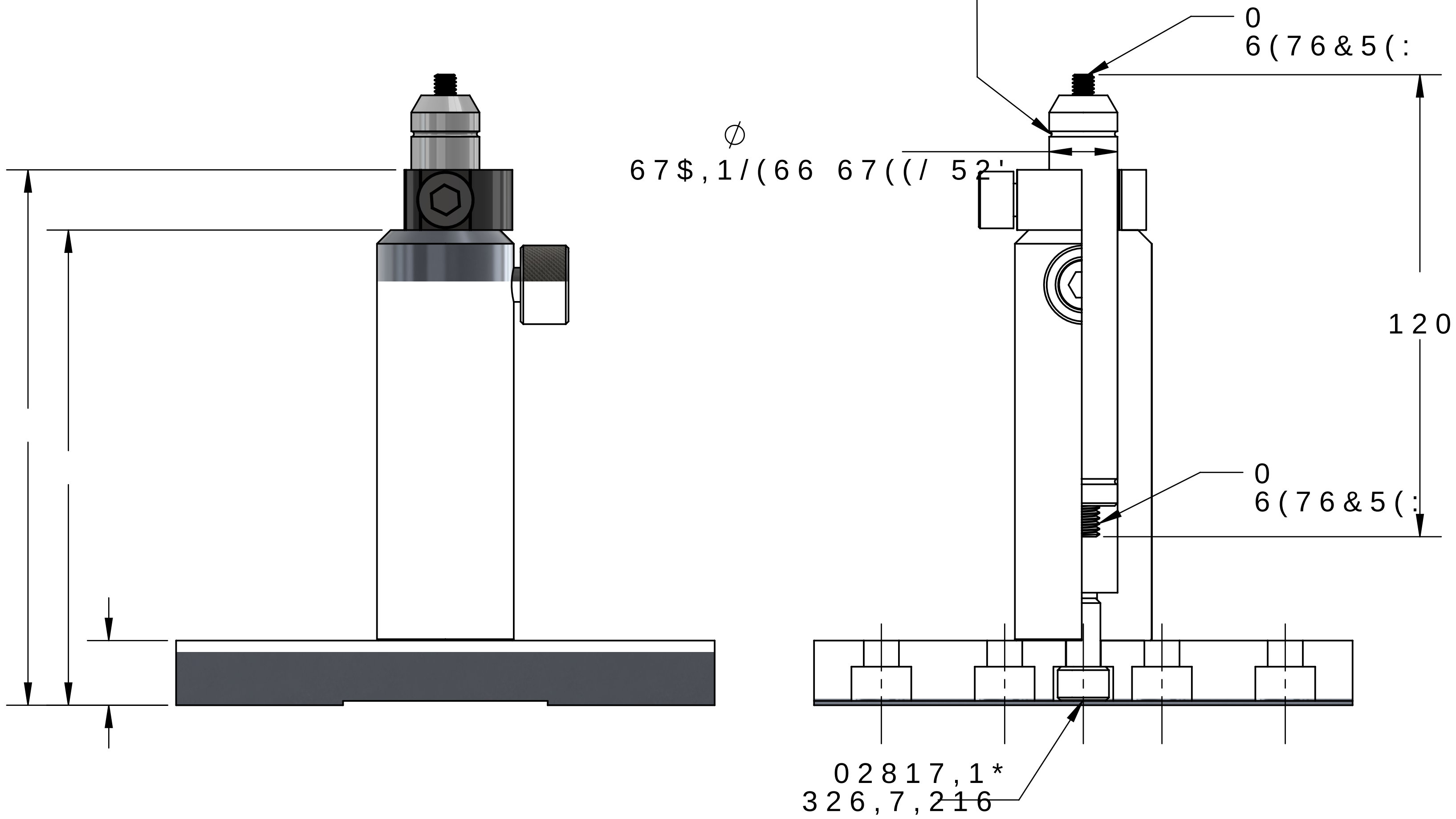

127(
',0(16,21 ,1 PP

,03257$17

&('2&80(17 (67
/$ 35235,(7('(
*(17(& (/(&752
237,48(,/ 1(
'2,7 3$6 (75(
'(92,/(87,/,6(
28 5(352'8,7
(1 7287 28 (1
3$57,(6$16
$8725,6$7,21
(&5,7(

5(9	5(9,6,21	'$7(	⊢	9(5	$33

72/(5$1&(
(& “
)5$& “
$1*/(“
√

$33	PRB
9(5	
⊢ 6 7+,9,(5*(	57
'$7(	

/$<287 '5$:,1*
67$1' 6 & 0
'(7(&725 67$1'

352-(&7,21

6.

$