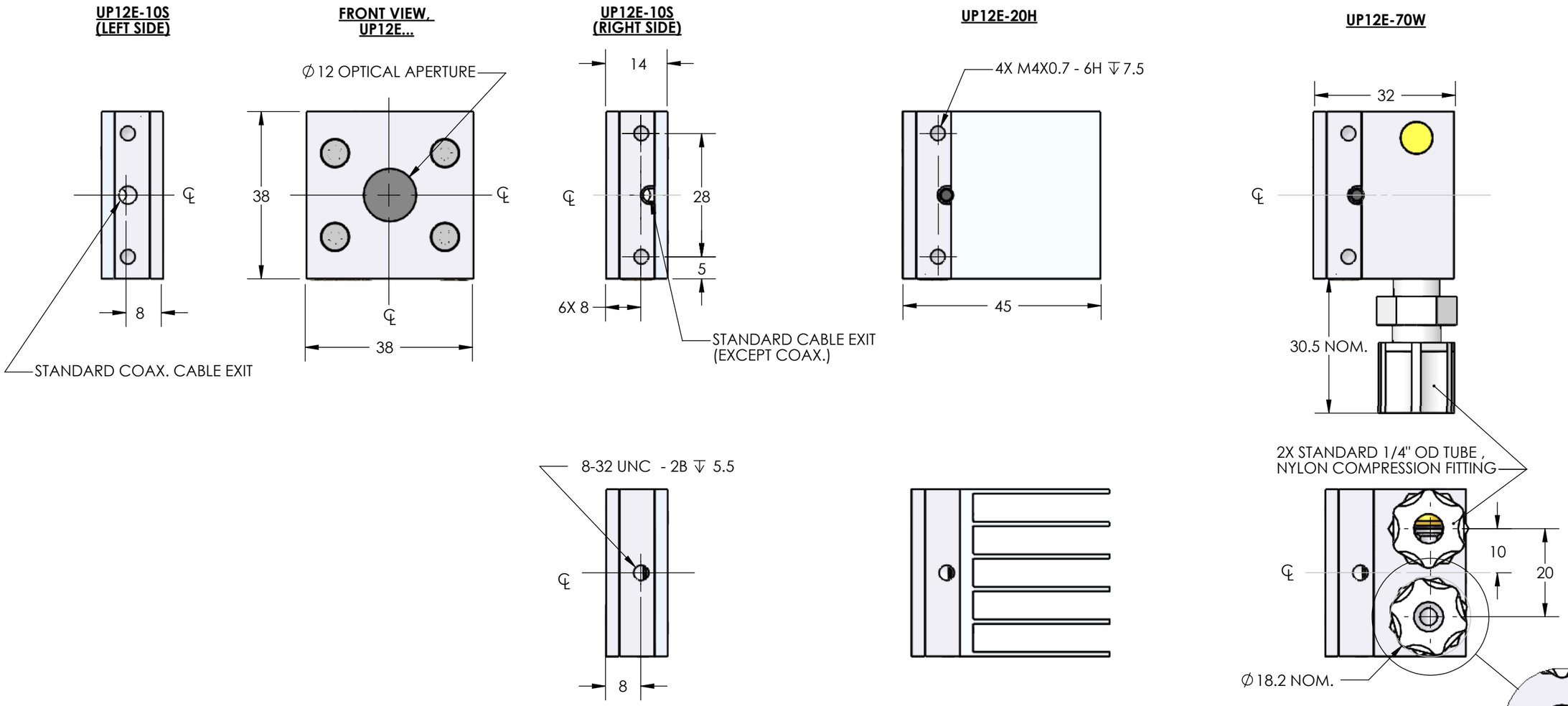

MOUNTING WITHOUT FRONT COVER; UP12E-xxx-Hx

SEE NOTES 2 & 3

NOTES:
1- DIMENSIONS IN mm
2- FASTENER LENGTH = 11mm + THICKNESS OF CUSTOMER SUPPLIED MOUNT
3- WATTMETER MUST BE FASTENED FROM THE FRONT IN ORDER TO SUPPORT THE BODY, THE THERMAL DISK AND THE REAR COVER OR HEATSINK.

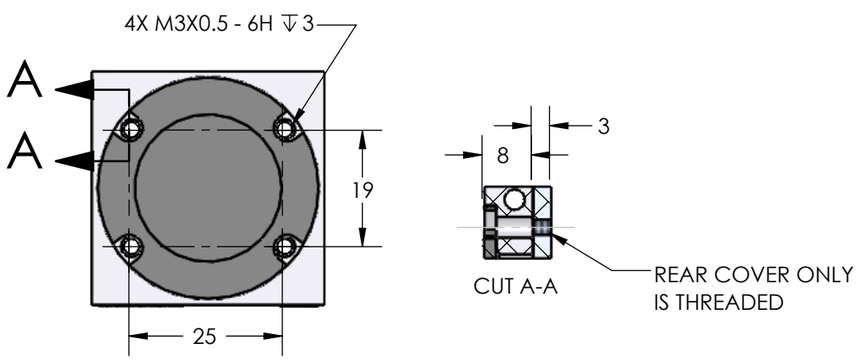

IMPORTANT:
THIS DOCUMENT IS PROPERTY OF GENTEC ELECTRO-OPTICS, IT CANNOT BE DISTRIBUTED, USED OR REPRODUCED IN WHOLE OR IN PART WITHOUT EXPRESS WRITTEN AUTHORIZATION

ML 2024-04-24 GT 2024-04-17 JP 2024-03-26 ST 2024-02-27 L.R. MAS 2024-02-28

REF.	REVISION	DATE	⊢	VER	APP
C	MINOR CORRECTION	2024/02/26	ST	MAS	
B	CABLE EXIT MODIFIED TO CABLE CLAMP	2016/06/29	RVH		
A	UD12 HOLES MODIFIED	08/10/20	RVH		

TOLERANCE
DEC. ±
FRAC. ±
ANGLE ±
√

gentec-eo

APP.
VER.
⊢ Ronald VH

LAYOUT DRAWING

UP12E...(WITHOUT PCB)

PROJECTION

DATE 13/13/2005

1:1

SK-8478

A3